REACH & RoHS COMPLIANT

| REV. 版本 | ECN NO. 变更说明 | DATE 日期 |
|---|---|---|
| A | 图纸整理 | 2015.03.03 |
| B | 增加标注及图面整理 | 2017.04.24 |
| C | 增加料号 | 2019.03.12 |
| D | 图纸整理 | 2022.05.19 |
| E | 增加料号 | 2023.05.11 |

NOTE:
MATERIAL:
1. CONTACT: PHOSPHOR BRONZE.
2. CONNECTOR HOUSING: LCP UL 94V-0. COLOR: BLACK.
3. MOULDED INSERT: HIGH TEMPERATURE PLASTIC UL 94V-0. COLOR:BLACK.
4. CAGE: COPPER ALLOY.
5. LIGHT PIPES: POLYCARBONATE. UL 94V-0. COLOR:CLEAR
6. LIGHT PIPE HOUSING: PBT UL 94V-0. COLOR:BLACK.
7. EMI SPRING: COPPER ALLOY.

PLATED:
1. CONTACT MATING AREA : PLATING GOLD OVER 1.27 MICROMETERS MINIMUM NICKEL.
2. CONTACT NEEDLE EYE: 0.5 MICROMETERS MINIMUM MATTE TIN OVER 1.27 MICROMETERS MINIMUM NICKEL.

MECHANICAL REQUIREMENT:
1. DURABILITY: 100 CYCLES MIN.
2. INSERTION AND EXTRACTION FORCE: 40N MAX & 12.5N MAX

ENVIRONMENTAL:
1. LOW LEVEL CONTACT RESITANCE(LLCR): ΔR 10 MILLIOHMS MAXIMUM FOR SHIELD AND SIGNAL CONTACTS.
2. DIELECTRIC WITHSTANDING VOLTAGE: 300V AC/MAX.
3. INSULATION RESISTANCE: 1x109/ OHMS MINIMUM.
4. RATINGS CURRENT: 0.5 AMPS MAX.
5. RATINGS VOLTAGE: 30 VOLTS DC/AC(RMS) MAX.
6. OPERATION: -40° C~+85° C.
7. STORAGE: -55° C~+105° C.
8. ROHS COMPLIANT

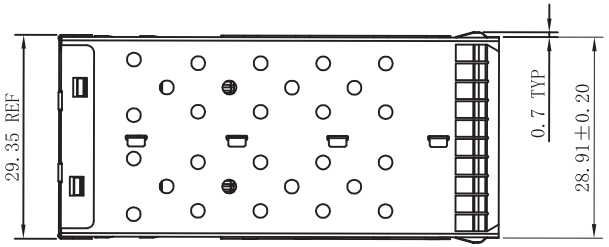


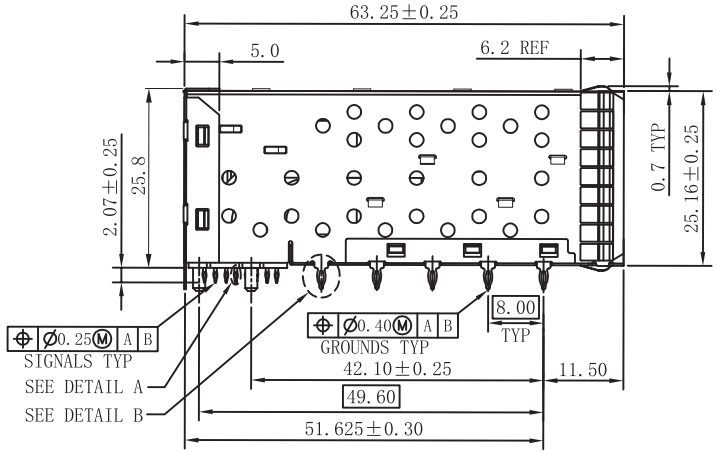


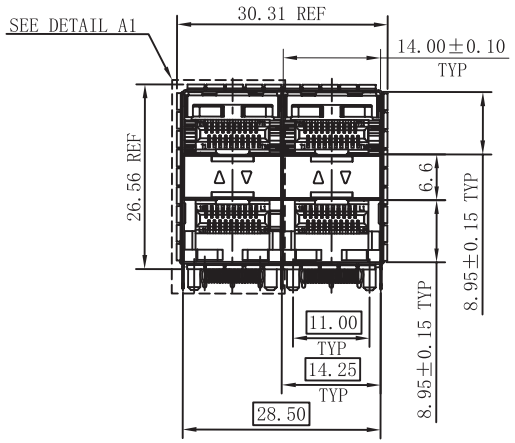


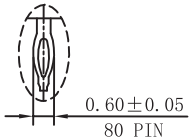


DETAIL A
SCALE 10:1

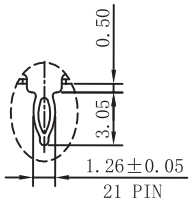


DETAIL B
SCALE 5:1

苏州沃虎电子科技有限公司
Su Zhou Voohu Electronic Tech.Co.Ltd

TEL: +86 400 1048 018
WEB: WWW.WOHU-TEK.COM

| TITLE: | SIZE | UNITS | GENERAL TOLERANCES UNLESS SPECIFIED | | APPROVED BY: |
|---|---|---|---|---|---|
| SFP+ 2X2 PRESS FIT CONNECTOR | A4 | MM[INCH] | | | Geoffrey.Song |
| PART NO.: WHSFP15422F031 | SCALE 1:1 | REV A0 | x±0.35 / .x±0.30 | x°±3.0° / .x°±2.0° | CHECKED BY: Elvis.Song |
| REMARK: CONTACT PALTING GOLD 30U" | SHEET 1/4 | | .xx±0.25 / .xxx±0.10 | .xx°±1.5° / .xxx°±1.0° | DESIGNED BY: Sunny.Xu |

REACH & RoHS COMPLIANT

| REV. 版本 | ECN NO. 变更说明 | 日期 |
|---|---|---|
| | | |

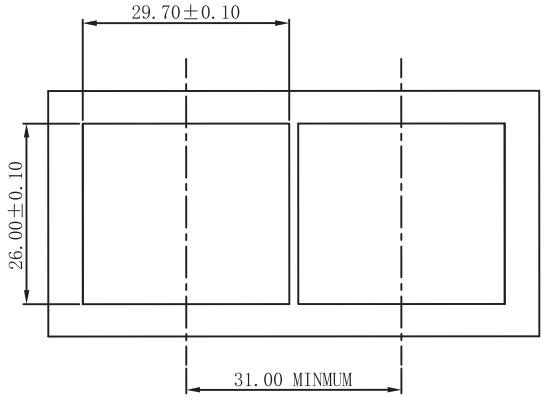


BEZEL CUT-OUT CENTER SPACING DETAIL
BEZEL THICKNESS:0.8-2.6

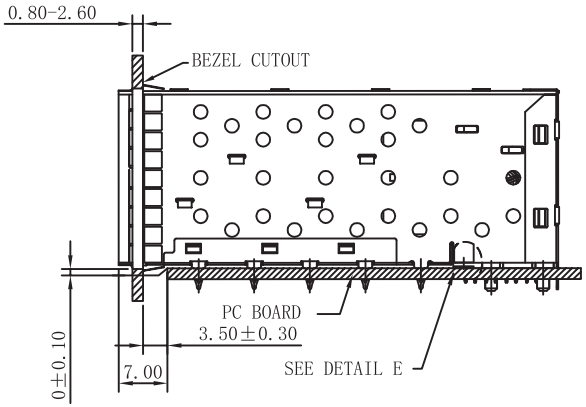


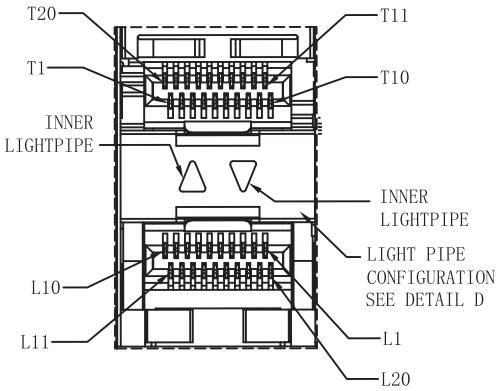


DETAIL A1
SCALE 4:1

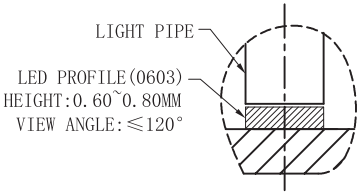


DETALI E
SCALE 4:1

| | | | | | |
|---|---|---|---|---|---|
| 苏州沃虎电子科技有限公司 Su Zhou Voohu Electronic Tech.Co.Ltd | TITLE: SFP+ 2X2 PRESS FIT CONNECTOR | SIZE A4 | UNITS MM[INCH] | GENERAL TOLERANCES UNLESS SPECIFIED | APPROVED BY: Geoffrey.Song |
| | PART NO.: WHSFP15422F031 | SCALE 1:1 | REV A0 | x±0.35 / .x±0.30 / .xx±0.25 / .xxx±0.10 — x°±3.0° / .x°±2.0° / .xx°±1.5° / .xxx°±1.0° | CHECKED BY: Elvis.Song |
| TEL: +86 400 1048 018 / WEB: WWW.WOHU-TEK.COM | REMARK: CONTACT PALTING GOLD 30U" | SHEET 2/4 | | | DESIGNED BY: Sunny.Xu |

REACH & RoHS COMPLIANT

| REV. 版本 | ECN NO. 变更说明 | 日期 |
|---|---|---|
| | | |

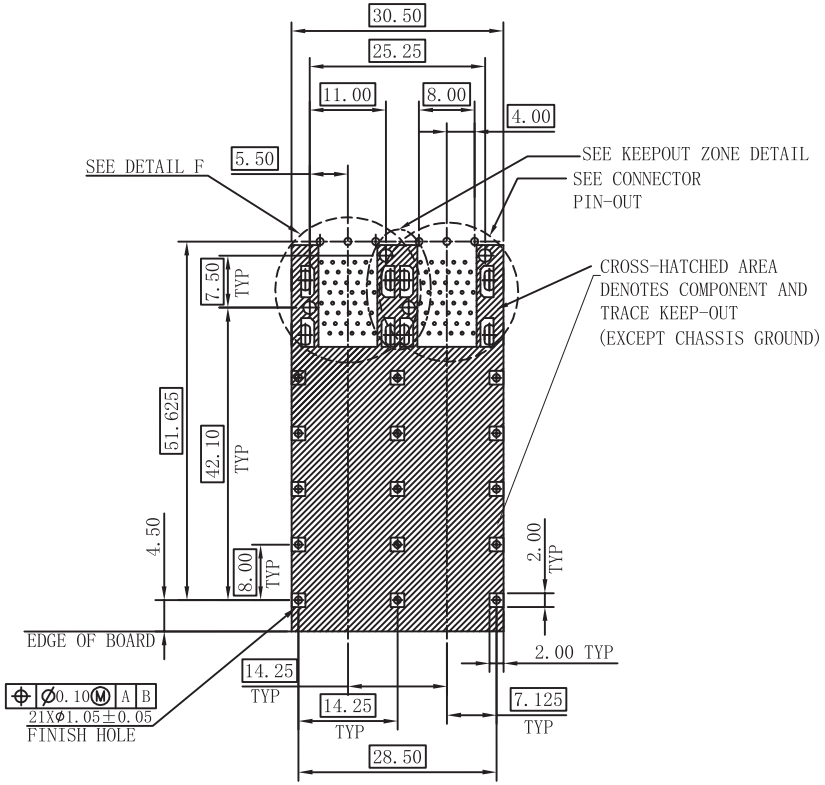


RECOMMENDED PCB LAYOUT-COMPONENT SIDE
RECOMMENDED PCB THICKNESS-2.63 MM

THE ENTIRE AREA OF THE CONNECTOR FOOTPRINT
TO BE CONSIDERED THE KEEP OUT AREA FOR COMPONENTS
(OTHER THAN LIGHT PIPE LED'S)
THIS AREA IS INDICATED BY THE DASHED LINE

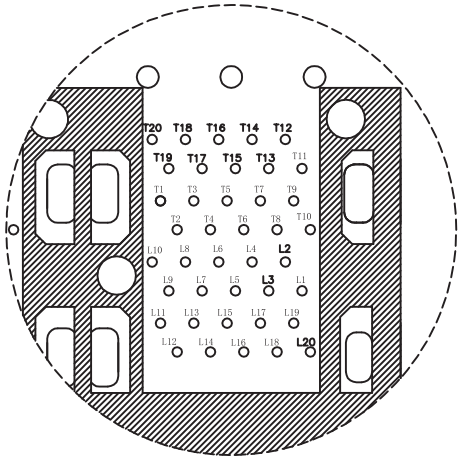


CONNECTOR PIN-OUT
COMPONENT SIDE OF BOARD

苏州沃虎电子科技有限公司
Su Zhou Voohu Electronic Tech.Co.Ltd

TEL: +86 400 1048 018
WEB: WWW.WOHU-TEK.COM

| TITLE: | SIZE | UNITS | GENERAL TOLERANCES UNLESS SPECIFIED | | APPROVED BY: |
|---|---|---|---|---|---|
| SFP+ 2X2 PRESS FIT CONNECTOR | A4 | MM[INCH] | | | Geoffrey.Song |
| PART NO.: | SCALE | REV | x±0.35 | x°±3.0° | CHECKED BY: |
| WHSFP15422F031 | 1:1 | A0 | .x±0.30 | .x°±2.0° | Elvis.Song |
| REMARK: | SHEET | | .xx±0.25 | .xx°±1.5° | DESIGNED BY: |
| CONTACT PALTING GOLD 30U" | 3/4 | | .xxx±0.10 | .xxx°±1.0° | Sunny.Xu |

REACH & RoHS COMPLIANT

| REV. 版本 | ECN NO. 变更说明 | 日期 |
|---|---|---|
| | | |

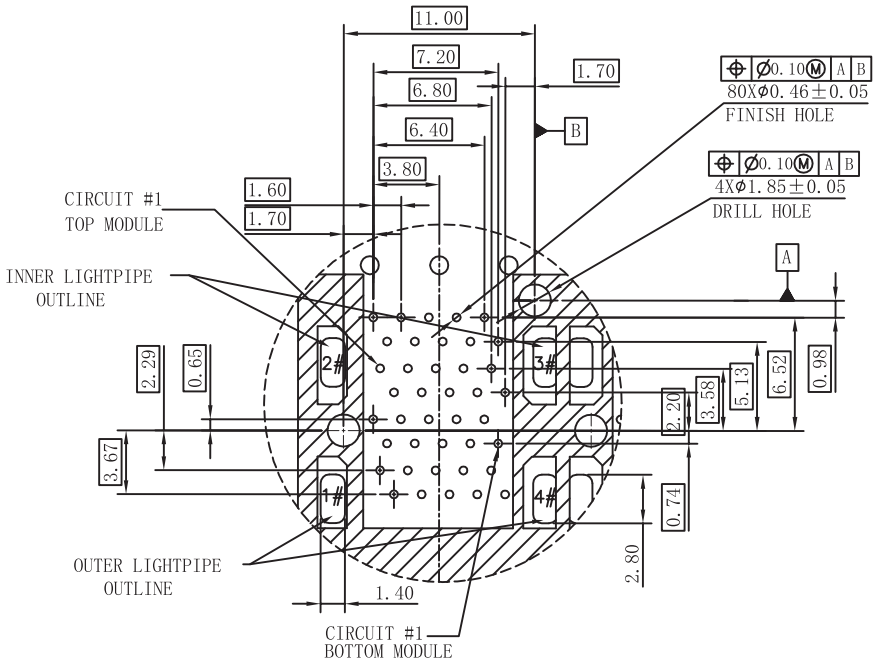


DETAIL F
SCALE 5:1

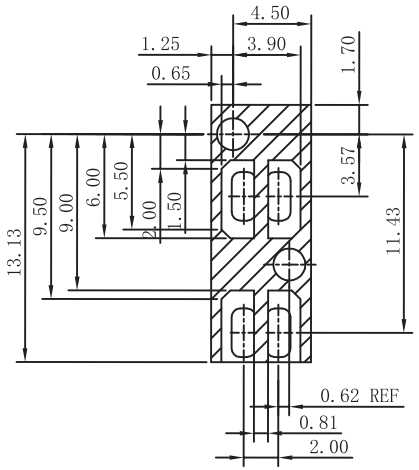


KEEPOUT ZONE
DETAIL SCALE 5:1

| | | | | | |
|---|---|---|---|---|---|
| 苏州沃虎电子科技有限公司 Su Zhou Voohu Electronic Tech.Co.Ltd | TITLE: SFP+ 2X2 PRESS FIT CONNECTOR | SIZE A4 | UNITS MM[INCH] | GENERAL TOLERANCES UNLESS SPECIFIED | APPROVED BY: Geoffrey.Song |
| | PART NO.: WHSFP15422F031 | SCALE 1:1 | REV A0 | x±0.35 / .x±0.30 / .xx±0.25 / .xxx±0.10 — x°±3.0° / .x°±2.0° / .xx°±1.5° / .xxx°±1.0° | CHECKED BY: Elvis.Song |
| TEL: +86 400 1048 018 / WEB: WWW.WOHU-TEK.COM | REMARK: CONTACT PALTING GOLD 30U" | SHEET 4/4 | | | DESIGNED BY: Sunny.Xu |